Grenze International Journal of Computer Theory and Engineering , Special issue

Maintenance and Safety Technologies for High-rise Buildings

Amit Kashyap, Jaiveeth Jain, Kiran N, Adarsh Hegde
Dept. of Electronics and Communication, JSSATE, Bangalore, India
amith1101@gmail.com

***Abstract*—The foundation for systems used to survey the structure of high-rise building is the evolution of the internet of things and as a result of this; we can collect data for safety of building structure of a different kind. The obtained data can thus be used to provide relevant intelligent services. This paper proposes a system for the supervision of building structure. The various sensors which are linked in the system are used to survey the various parameters of the building structure. This includes monitoring of misalignment in the critical structures of the building due to stress and aging, fire detection, monitoring the load on the building, and detection of seismic activity. Image processing is used for crack and fire detection. The high-rise building provides an ideal scenario for power generation using harvested rainwater. Accordingly, the actualized system acts as a supplementary power source for the main system.**

***Index Terms*— Auxiliary power source, crack detection, fire detection, image classification, image processing, seismic disturbances**.

I. INTRODUCTION

Rapid urbanization is leading to significant increase in the number of high-rise buildings in the country. Emporis Standards defines a high-rise as a multi-story structure between 115-330 ft tall, or a building with five floors or higher. They are the only solution in scarce or expensive land situations and they provide more compact and integrated management. However, this makes it more difficult to control risks and handle emergencies. The size of the high rise buildings makes it difficult to monitor the structural conditions of the building. Earthquakes and fire disasters are the main points of concern for safety in high-rise buildings.
This paper proposes an automated device which monitors building parameters makes it easier to tackle safety concerns. These building parameters include pillar structure integrity, critical weight load for a floor, fire hazard detection and wall crack detection. These conditions can be regularly monitored and recorded.

II. LITERATURE SURVEY

Takeshi Ohashi [2], Tomoyuki Yamaguchi [1], Rashmi R.A [3] has discussed crack detection using Support Vector Machine, in which images are taken on a regular basis and compared with the images stored in the database. The support vector machine classifies the images based on the features extracted from the image and this helps in knowing if there is a crack present.
Wang L [4] has talked about the working and use of resistive flex sensor in his paper. The resistance of the

Grenze ID: 01.GIJCTE.3.4.67

flex sensor changes whenever a bend is detected. The sensor is placed at the critical points of the building, whenever any undesirable change is found in the structure the voltage output of sensor changes and this is used to detect any fault in the structure.
Gabriela W. Favieiro [5] in his paper has spoken about the working of a load cell. The load cell gives output voltage based on the input weight to it. The load cell is placed where the weight on the building needs to be monitored. Whenever load on the building exceeds the tolerable limit an alert message is sent in order to rectify it.
The proposed system uses these methods and also includes load cell to monitor the weight on the building, vibration sensor for detecting an earthquake and prevent possible loss of human lives. The system has been made self-sufficient by providing an auxiliary power source by using the power generated by harvested rainwater. A Wi-Fi module is used to send the necessary output messages to mobile phones using an application on the phone.

Figure 1: Cracks inside a building

III. Proposed System

The system proposed in this paper includes detection of any anomaly in high-rise building which helps in the safety of the building and helps in preventing any loss of human lives due to any mishap. The system uses ARM7-LPC2148 microcontroller, which is a 64 pin IC; used to control all the sensors connected to it. The flex sensor helps in detection of any undesirable change in the critical structure of the building like a bent in a pillar. The load cell is used to monitor the weight on the high-rise building; if the weight exceeds the threshold set then an alert message is sent; thus preventing the breakdown of the structure. The vibration sensor is included to detect any seismic activity near the building, this helps in preventing any loss of human lives due to an earthquake. Flame sensor helps in detection of fire in the building; it does so by detecting the change in the wavelength caused due to the flames. The camera is used to capture images of the critical structures in the building to monitor cracks and fire in the building. The proposed system uses MATLAB for the detection of cracks and fire in the building by using image processing techniques.
The power generation unit consists of a water turbine connected to a DC-motor; the water collected from rainwater harvesting is made to run through the blades of the water turbine which in turn rotates the DC-motor. The output power from the motor is used to power the system, hence making it self-sufficient. A 16x2 LCD display is used to display the output messages of all the sensors. A Wi-Fi module is included to send the necessary output messages from the sensors to the building monitoring authorities to alert them of possible mishap.

IV. Hardware Requirements

A. LPC2148 microcontroller

The LPC2148 microcontroller is a 32-bit CPU whose architecture is based on the principle of Reduced Instruction Set Computer (RISC). The Microcontroller has a 12MHz crystal for system clock and 32 kHz crystal for the real time clock. The ARM7 LPC2148 has a 128-bit wide memory interface; 32-bit code execution at the utmost clock rate is possible due to the eccentric accelerator architecture. The CPU operates in the voltage range of 3.0 V to 3.6 V.

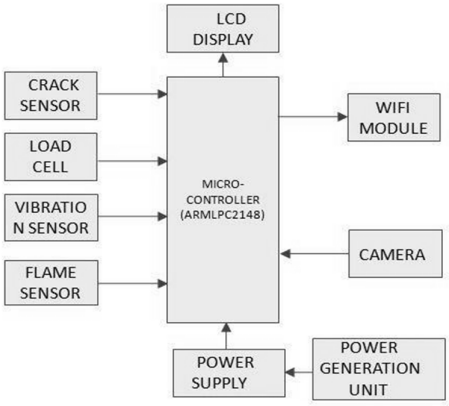

Figure 2: System Description

Figure 3: LPC2148 microcontroller

B. Flex Sensor

The amount of bending in an element can be detected using a flex sensor. When the sensor is bent, it produces a change in resistance corresponding to the bend radius. The larger the radius, the lower is the resistance value

C. Load Cell

Load Cell is a sensor which measures the magnitude of the load acting on it. It is essentially a transducer which generates an electric signal proportional to the magnitude of load i.e., the force applied to it. It is fabricated from anodized aluminum alloy

Figure 4: Flex Sensor

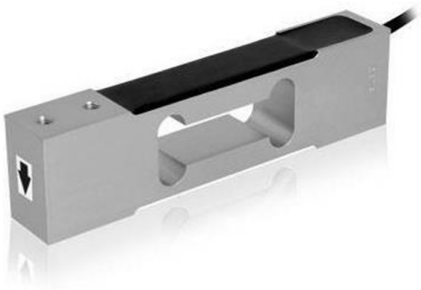

Figure 5: Load Cell

D. Vibration Sensor

The vibration sensor is a transducer which generates an electrical signal corresponding to minute changes in acceleration, force, strain or pressure. It works on the principle of the piezoelectric effect. The Vibration module uses the sensor along with a comparator to perceive vibrations beyond a particular limiting value. A potentiometer is provided to set the required threshold.

Figure 6: Vibration Sensor

Figure 7: Flame Sensor module

E. Flame Sensor

Flame module discerns the existence of fire by determining the wavelength of the light incident on the sensor. It has a working range of 0.76 to 1.1 micrometer. It has an operating voltage of 3.3 to 5V. It is provided with an inbuilt potentiometer which can be used to set the sensitivity threshold.

F. WI-FI modulator ESP8266

The ESP8266 is a microcontroller that includes Wi-Fi Capability. It is a 32-bit RISC CPU running at 80 MHz it has a 64KB of instruction RAM, 96 KB of data RAM. It contains an external QSPI flash – 512KB to 4 Mi\B (up to 16 MB is supported). It has 16 GPIO pins and one 10-bit ADC

G. LCD display

As shown in fig 7, a liquid crystal display (LCD) is a thin and flat electronic display used to visualize any data that makes use of the light modulating properties of liquid crystals (LCs). Consist of a liquid crystal display, an array of tiny segments called pixels and to present the information that can be manipulated.

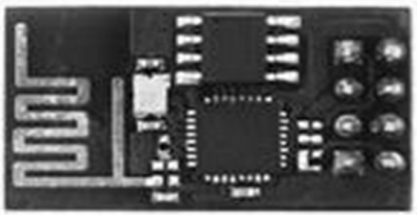

Figure 8: ESP8266 Wi-Fi Module

Fig 9: LCD Display

H. DC motor

The DC motor consists of wounded copper coils connected to the shaft, surrounded by two magnets. Whenever the coil rotates due to a change in the Electromotive Force (EMF) a current gets induced in the coil and can be obtained at the coil ending. Due to this principle of DC motor, it is used for power generation in the proposed system using harvested rainwater.

I. Camera

The camera used is a 16 megapixel Intex Camera. It is USB compatible. It has LED to provide visibility during night. The camera is used to capture images for crack detection

Figure 10: DC Motor

Figure 11: Camera

V. SOFTWARE REQUIREMENTS

A. Keil µVision

The µVision IDE combines project management, runtime environment, build facilities, source code editing, and program debugging in a single powerful environment. µVision improves embedded software development. All standard features of a modern source code editor are included in the software; it also helps in debugging any bugs present in the code. The software is modified for C/C++, the code is written using Embedded C.

B. Flash Magic

Flash Magic is a tool used to program microcontrollers using the serial port. It can be used to wipe the complete flash memory or particular memory blocks. Flash Magic can be used to perform functions like wiping, viewing and altering flash memory, boot vector editing, carrying out a blank check of flash memory and other operations.

C. MATLAB

MATLAB or Matrix Laboratory is a high-level language with an interactive high-performance number processing environment. It combines programming, visualization, and computation in a simple to use graphical interface. The smallest computational element of Matlab is a matrix. It inculcates non-dimensioning of the matrix enabling faster and easier high-level computations. Most of the command codes for Matlab are written in C++.

D. TCP/UDP test tool

TCP/UDP TEST TOOL is a product application from the System Maintenance subcategory. Notwithstanding a TCP server and an essential capacity of a TCP customer and UDP correspondence it additionally gives Connection affirmation to the assignment address in PING. In IPCONFIG You can check the status of Wi-Fi and offer the correspondence content record stockpiling and different applications.

VI. FLOW CHART

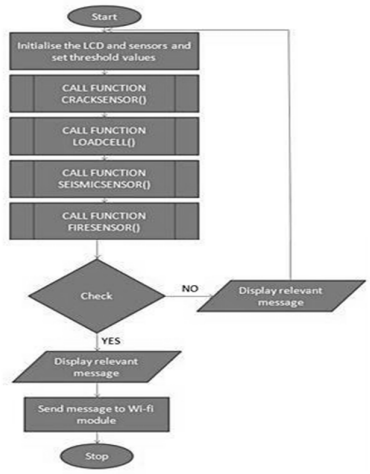

Figure 12: Microcontroller program flow chart

Figure 12 shows the flowchart of working of the Embedded C program, once the device is turned on, the LCD and other sensors are initialized. Individual functions of all the sensors are then called, while execution each sensor checks if it'sthe corresponding condition is below the threshold and respective message outputs are sent to LCD display and Wi-Fi module, the message transmitted by the Wi-Fi module is received by using a mobile phone installed with TCP/UDP application.

The figure 13 shows the flow chart of working of MATLAB program for fire detection, here the camera captures image every particular time period and then it converted to lab format, later each pixel value of the image is divided by the sum total of the pixels. Thus obtained value is later converted to binary format and depending on the number of 1's fire detection is done.

The figure 14 shows the flowchart of working of MATLAB program for crack detection, here the camera captures images for every particular period of time. The captured RGB images are converted into the gray format and are resized to a standard size. The features of this image are later extracted and are compared to the sample images stored in the database. If a match is found then the corresponding message is sent to the Microcontroller to display the message on the LCD, and also the message is sent to the mobile device using Wi-Fi module.

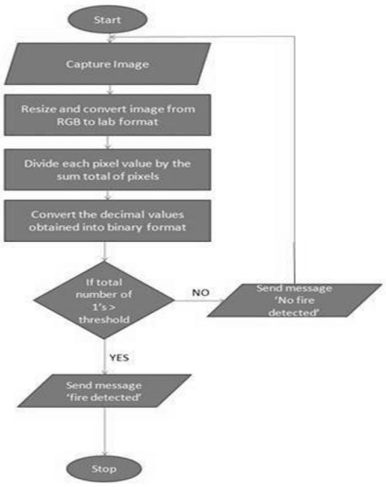

Figure 13: Matlab code for fire detection

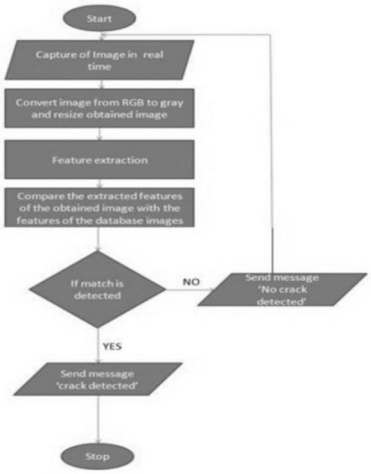

Figure 14: Matlab code for crack detection

VII. Results

The microcontroller checks the sensors inputs. If any bend is detected in any critical structure of the building by the flex sensor it sends a corresponding signal to the microcontroller. If the fire is detected by the flame sensor it sends a necessary signal to the microcontroller. If any vibrations are detected by the seismic sensor it sends the corresponding signal to the microcontroller. If weight exceeding critical load is detected the load cell sends a corresponding signal to the microcontroller. The image captured by the camera is run through Matlab processor. Thus crack detection and fire detection are realized. Finally, the output status of each sensor is displayed on the LCD by the microcontroller. The data is forwarded to a designated mobile device via a TCP/UDP app. Thus the monitoring of the building safety parameters is realized. The following images shows pictures of the result

VIII. Conclusion

The numbers of high-rise buildings are increasing everyday due to urbanisation and safety of the structure poses a huge problem. The safety of human beings is the main concern and evacuation during fire incidents and other causalities pose a huge problem. Hence if it is prevented, safety can be maintained, by implementing the system proposed all these accidents can be prevented. It is also economical in the long run.

References

[1] Tomoyuki Yamaguchi,Shingo NakamuraRyo Saegusa,Shuji Hashimoto, “Image-Based Crack Detection for Real Concrete Surfaces”, *IEEJ TRANS* 2008

[2] Zhiwei Liu*A*, Shahrel A SUANDI, Takeshi OHASHI and Toshiaki EJIMA, “A Tunnel Crack Detection and Classification Systems Based on Image Processing”, Kyushu Institute of Technology, Iizuka, Fukuoka 820-8502, Japan

[3] Rashmi R.A, A.D Mane and S.L Tade, “Concrete Structure Analysis and Classification using Image Processing”, International Journal of Advanced Computer Research, Volume-3 Number-3 Issue-11 September-2011

[4] Wang L, Meydan T, Williams P and Kutrowski T, “A Proposed Optical-based Sensor for Assessment of Hand Movement”, Wolfson Centre for Magnetics, School of Engineering, Cardiff Univerisity, Wales, UK

[5] André V. Pigatto, Karina O.A. Moura, Gabriela W. Favieiro and AlexandreBalbinot, “A new Crank Arm Based Load Cell, with built-in conditioning circuit and strain gages, to measure the components of the force applied by a cyclist”